ĐẠI HỌC
BÁCH KHOA HÀ NỘI
HANOI UNIVERSITY
OF SCIENCE AND TECHNOLOGY

PROJECT TOPIC

Research and design of a three-phase inverter for induction motor control using active gate control techniques for power semiconductors

Team: EMC Inverter

Major: Control Engineering and Automation

Supervisor: Dr. Pham Van Long

ONE LOVE. ONE FUTURE.

CONTENT

I	**Overview**: Inverter and Semiconductor	3
II	**Theory**: Active gate driver	7
III	**System Design**: Inverter – Induction motor	8
IV	**Verification**: Simulation and Experiment	9
V	**Conclusion**: Final results and future development	15

OVERVIEW

Project name

Voltage source inverter for Induction Motor (Using SiC MOSFETs)

Project application

In induction motor drive systems, the DC-AC inverter converts the DC voltage from the DC link into a three-phase AC voltage with variable amplitude and frequency to control the speed and torque of the induction moto

Project Specification

Parameter	Values
Input DC voltage	400-800 VDC
Output AC voltage	380 VAC
Carrier frequency	5 kHz

Project plan

Phase 1	Phase 2
Task: System Principles and Requirements **Duration**: Weeks 1-2	**Task**:Modeling and Control Design (FOC) **Duration**: Weeks 3-5
Phase 3	**Phase 4**
Task: Power Stage and Component Selection **Duration**: Weeks 6-8	**Task**: PCB Design & Firmware Development **Duration**: Weeks 9-11
Phase 5	**Phase 6**
Task: Assembly & Integration **Duration**: Weeks 9-12	**Task**: Testing, Optimization and Results **Duration**: Weeks 13-16

1.1. Inverter systems in motor control

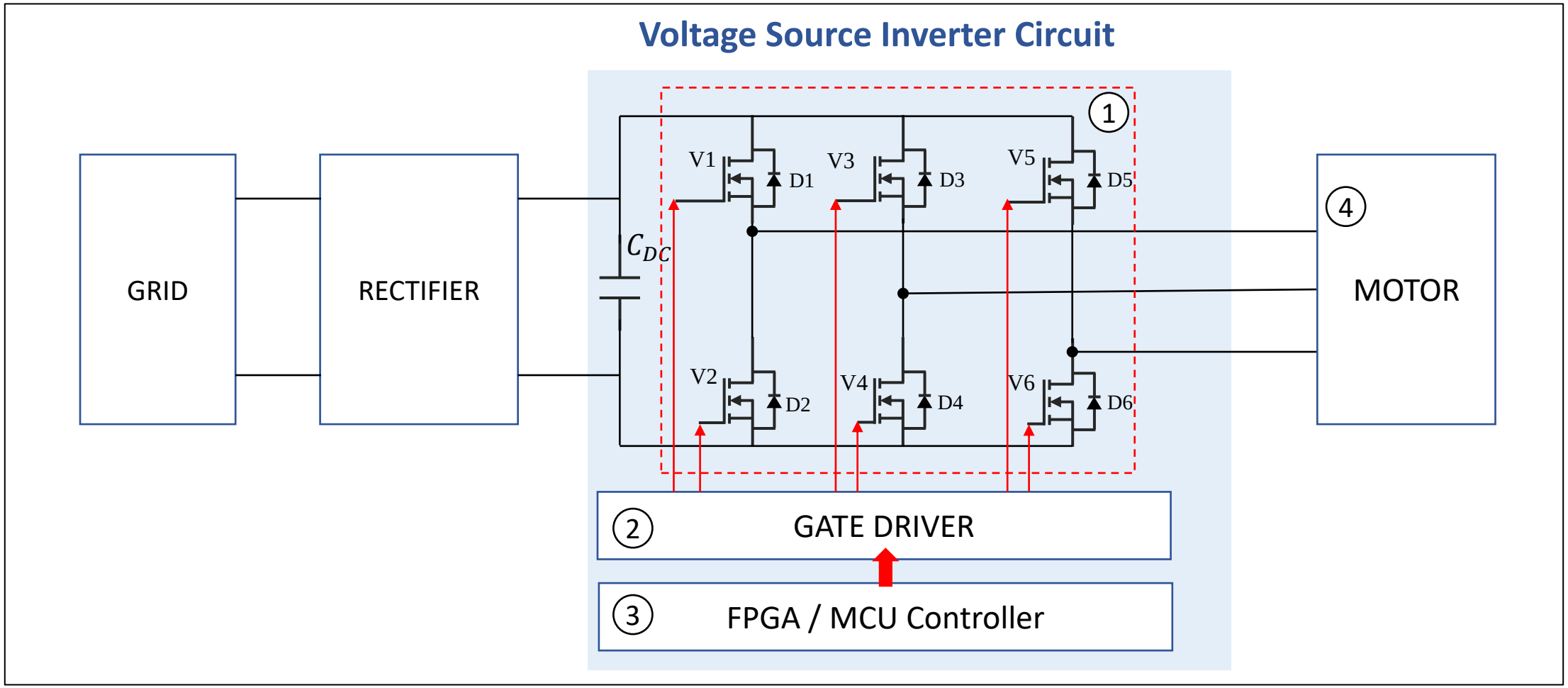

Fig 1.1. Three phase inverter for motor control

1.2. Semiconductor: SiC MOSFET

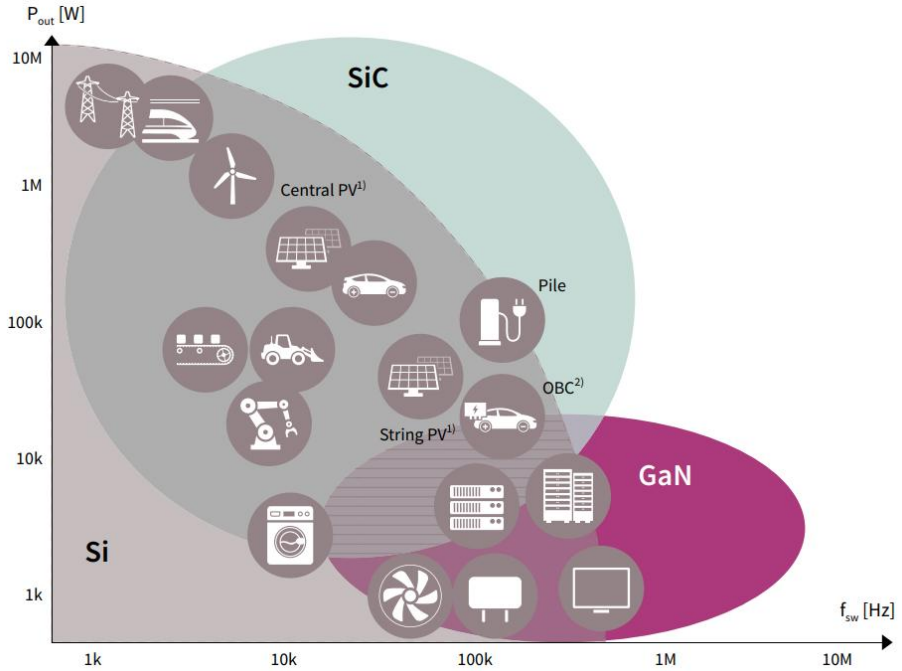

Fig 1.2. Silicon, silicon carbide and gallium nitride application

Silicon (Si)	Silicon carbide (SiC)
› Targeting voltages ranging from 25 V to 1.7 kV › The mainstream technology › Suitable from low to high power	› Targeting voltages ranging from 650 V to 3.3 kV › High power from moderate to high switching frequency

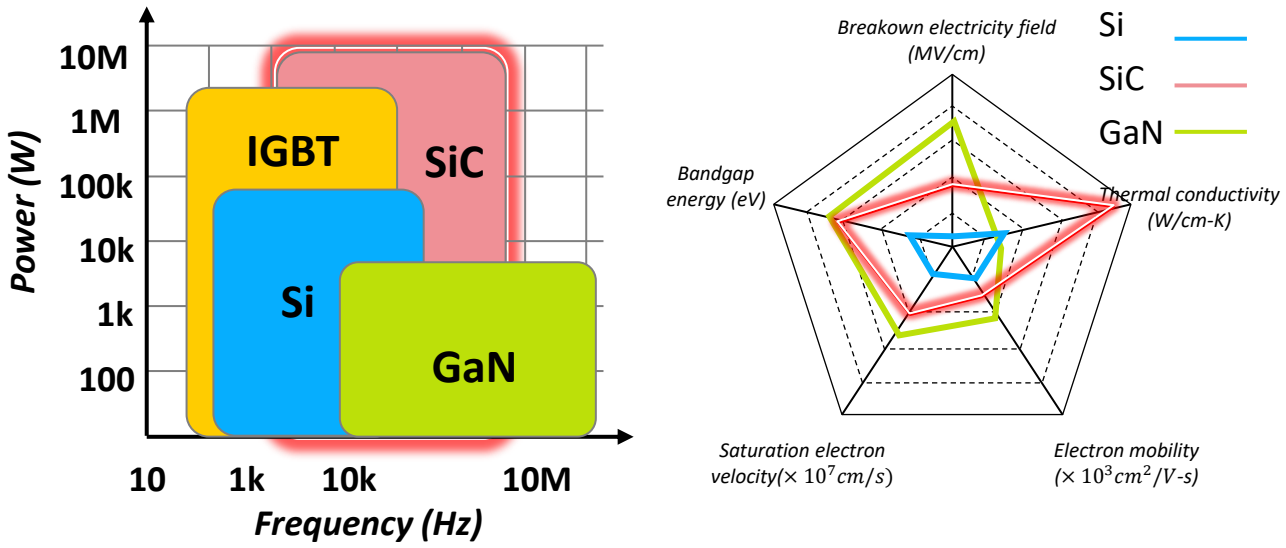

Fig 1.3. Silicon, silicon carbide and gallium nitride comparison

➢ Outstanding Advantages

- Wide operating voltage range: **650V-3.3kV**
- Fast switching speed
- High energy efficiency and high power density
- Stable operation at high temperatures

1.3. The Trade-off Challenge in Power Switching

Conventional Gate with low Rg

Turn off Vds & Ids

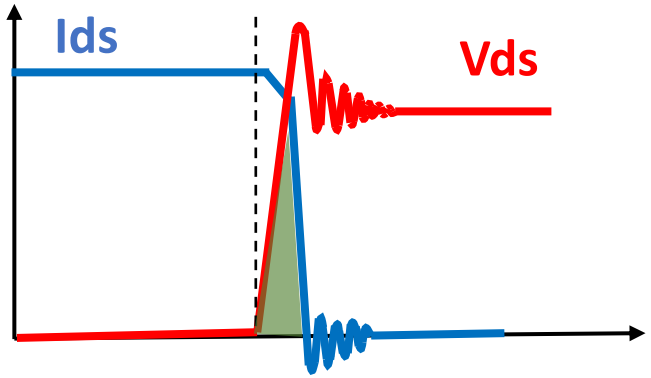

✓ Fast switching, low loss

× High surge voltage → Device failure

Conventional Gate with higher Rg

Turn off Vds & Ids

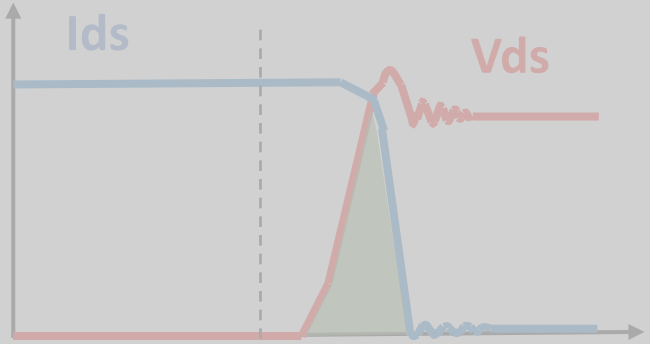

× Slow switching, high loss

✓ Low surge voltage → Device protection

Active gate driver with variable Rg

Turn off Vds & Ids

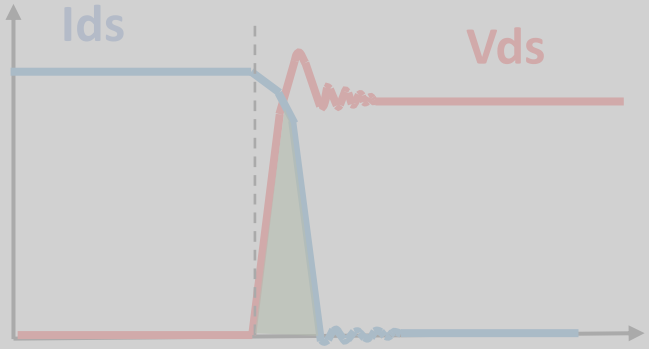

✓ Keep Vds at a safe level

✓ Optimize switching loss

1.3. The Trade-off Challenge in Power Switching

Conventional Gate with low Rg

Turn off Vds & Ids

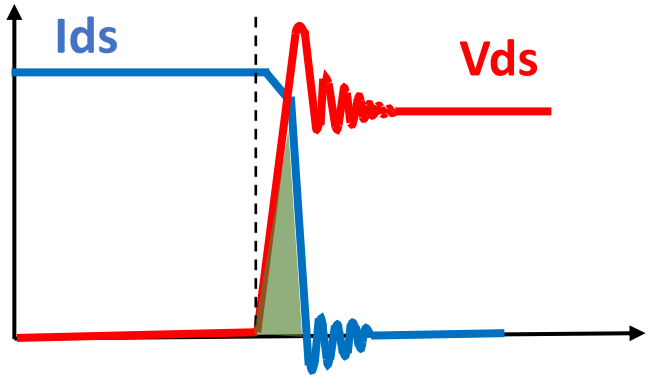

✓ Fast switching, low loss

× High surge voltage → Device failure

Conventional Gate with higher Rg

Turn off Vds & Ids

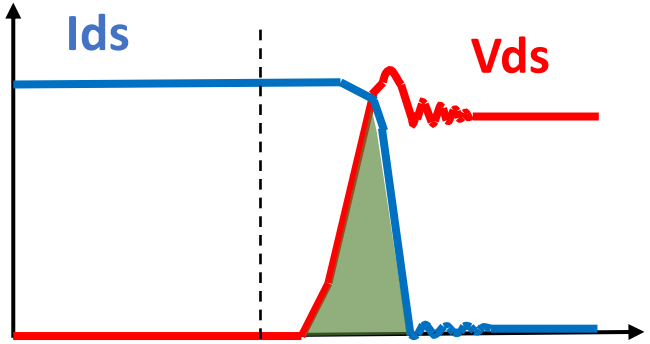

× Slow switching, high loss

✓ Low surge voltage → Device protection

Active gate driver with variable Rg

Turn off Vds & Ids

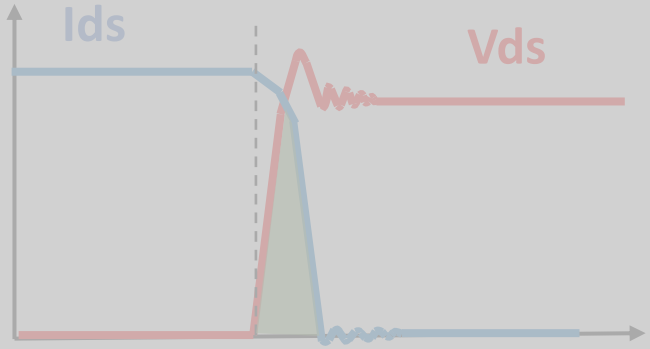

✓ Keep Vds at a safe level

✓ Optimize switching loss

1.3. The Trade-off Challenge in Power Switching

Conventional Gate with low Rg

Turn off Vds & Ids

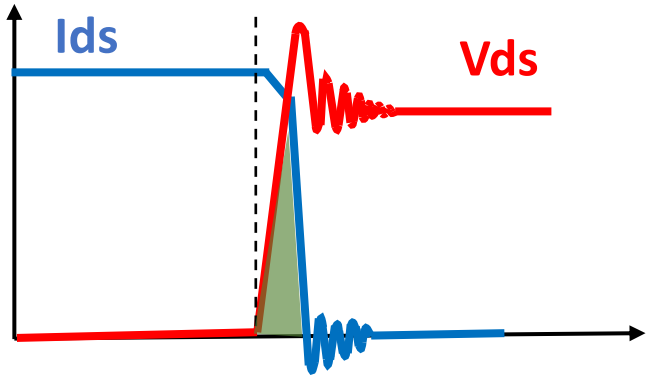

✓ Fast switching, low loss

× High surge voltage → Device failure

Conventional Gate with higher Rg

Turn off Vds & Ids

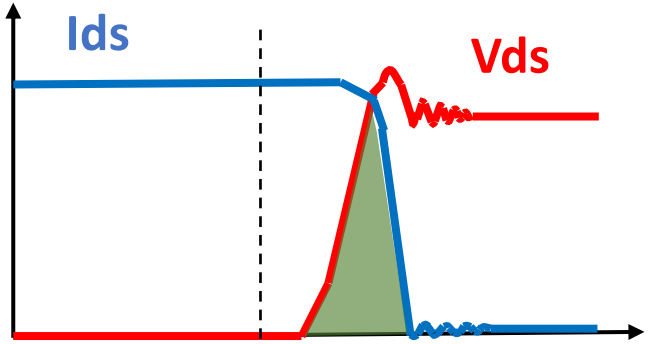

× Slow switching, high loss

✓ Low surge voltage → Device protection

Active gate driver with variable Rg

Turn off Vds & Ids

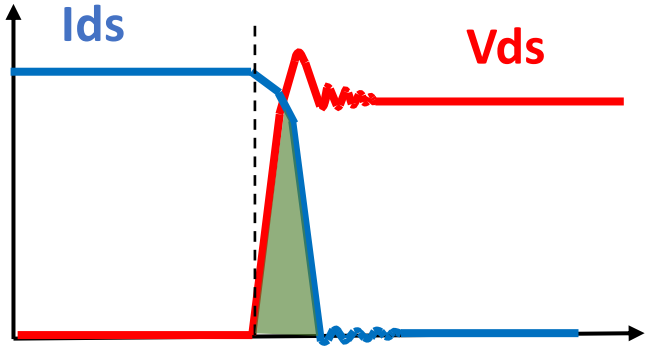

✓ Keep Vds at a safe level

✓ Optimize switching loss

2.1. Principle: Changing gate resistance by using Active gate driver

Principle

- Active gate driver uses parallel resistors R1, R2, R3 and R4 controlled by enable signals EN1, EN2, EN3 and EN4

$$R_g = \frac{1}{\sum \frac{EN_i}{R_i}}$$

- By varying the digital combinaton of EN signals, the equivalent gate resistance can be adjusted in real-time

Turn-on MOSFET

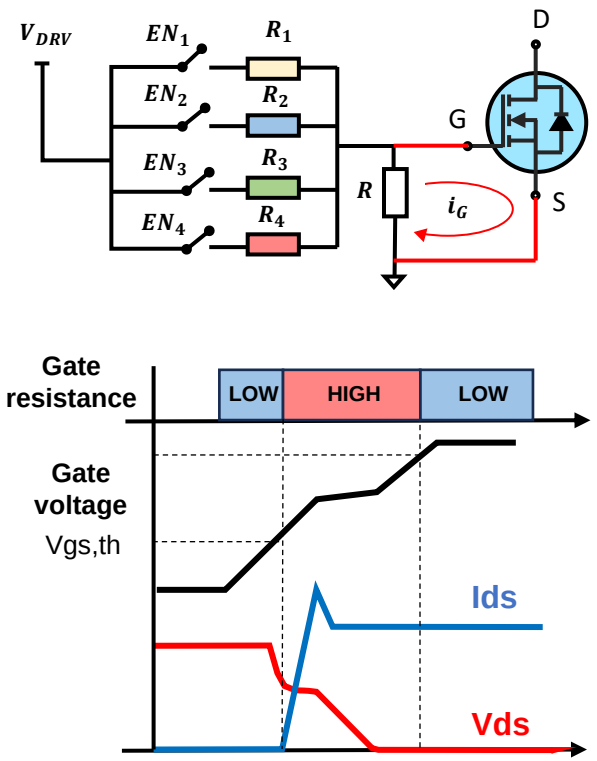

Turn-off MOSFET

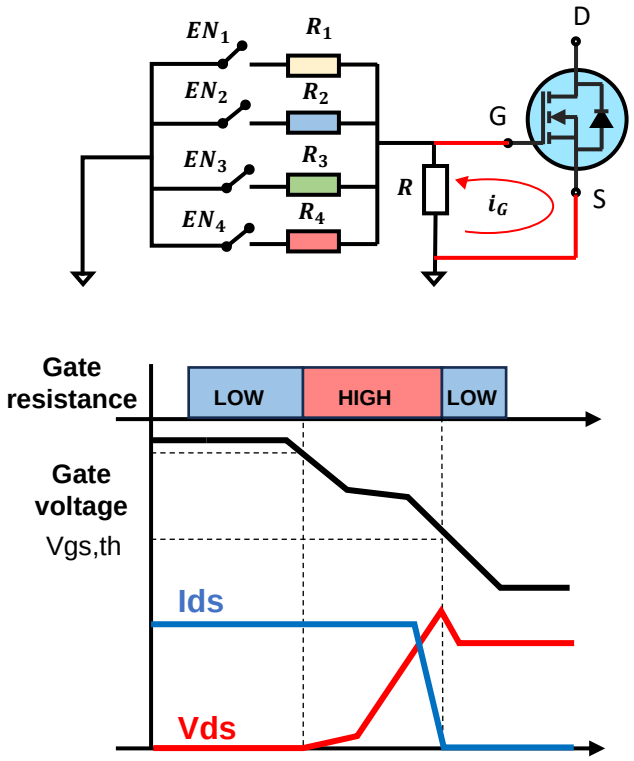

3.1. Parameters and Components

Parameter	Values
Input DC voltage	400-800 VDC
Output AC voltage	380 VAC
Carrier frequency	5 kHz
Fundamental frequency	50Hz
Deadtime	300ns

1

FS55MR12W1M1H_B11

4

M2BAX90SA4

3

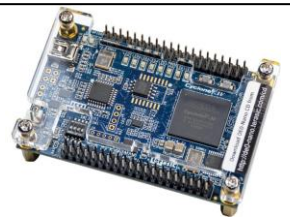

EP4CE6E22C8N

STM32F411CEU6

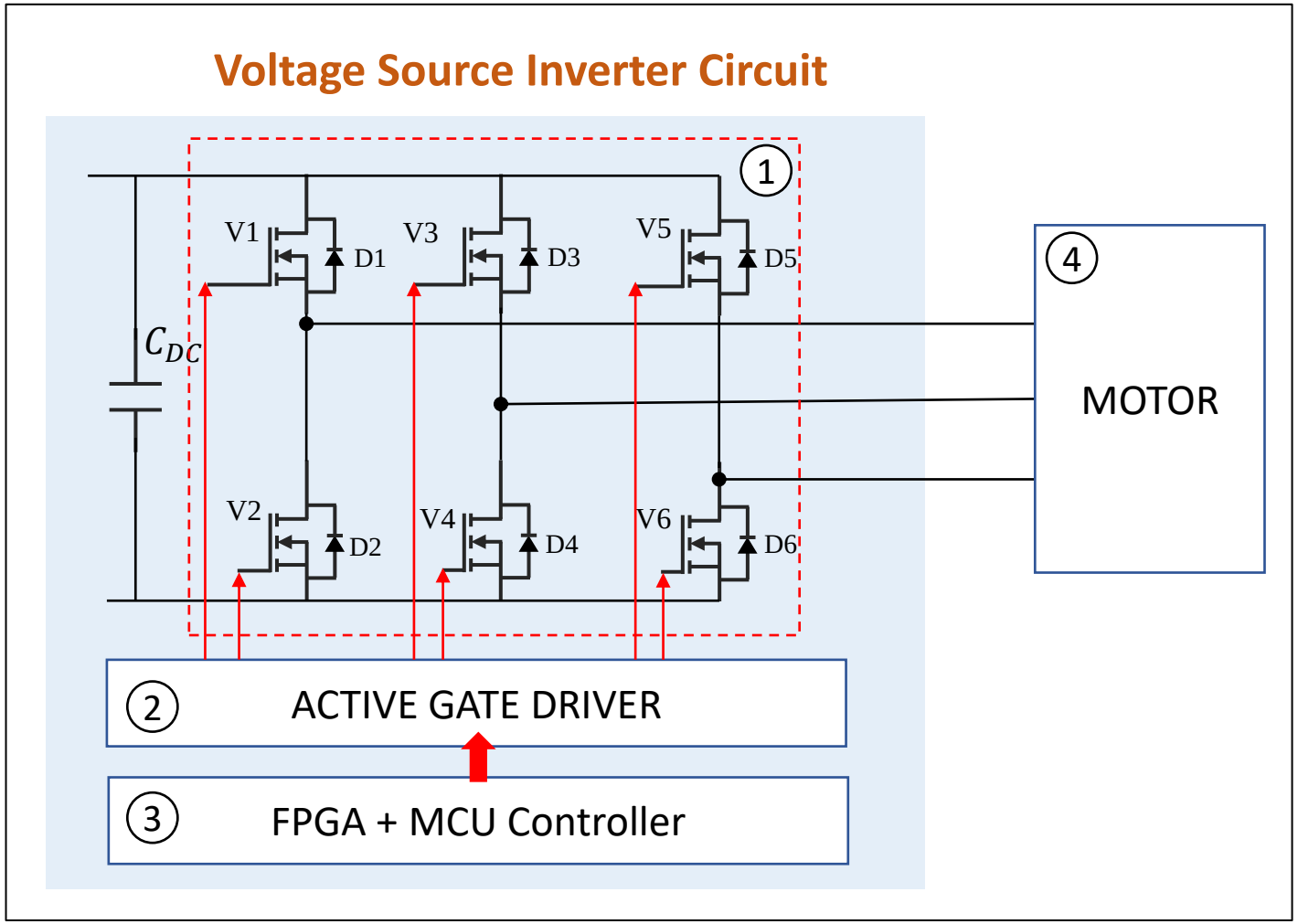

4.1. Simulation

❑ Simulation results

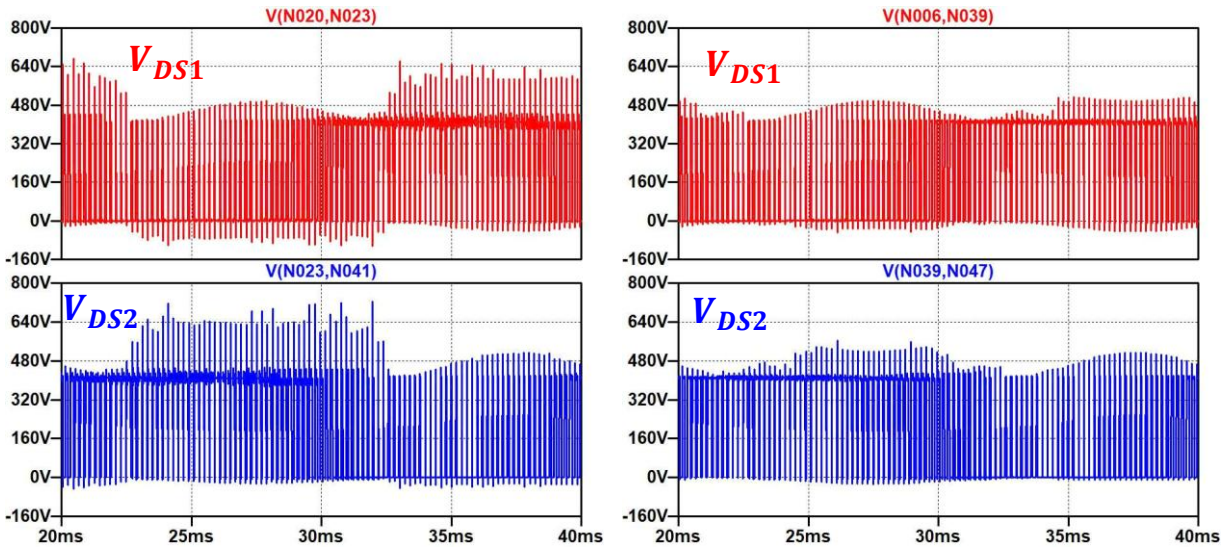

Fig 4.1. VDS voltage of Q1 and Q2 in phase U

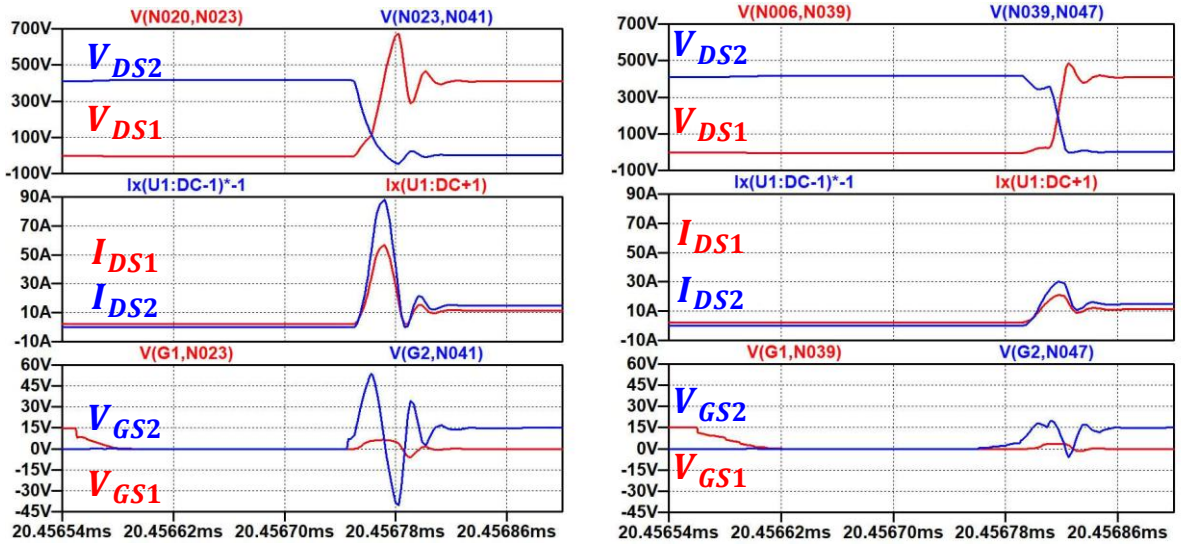

Fig 4.2. Switching process of Q1 and Q2 in phase U

❑ Result evaluation

Conventional Gate (Vds)	720V
Active Gate (Vds)	563V

- **22%** reduction in surge voltage

4.2. Experiment hardware setup

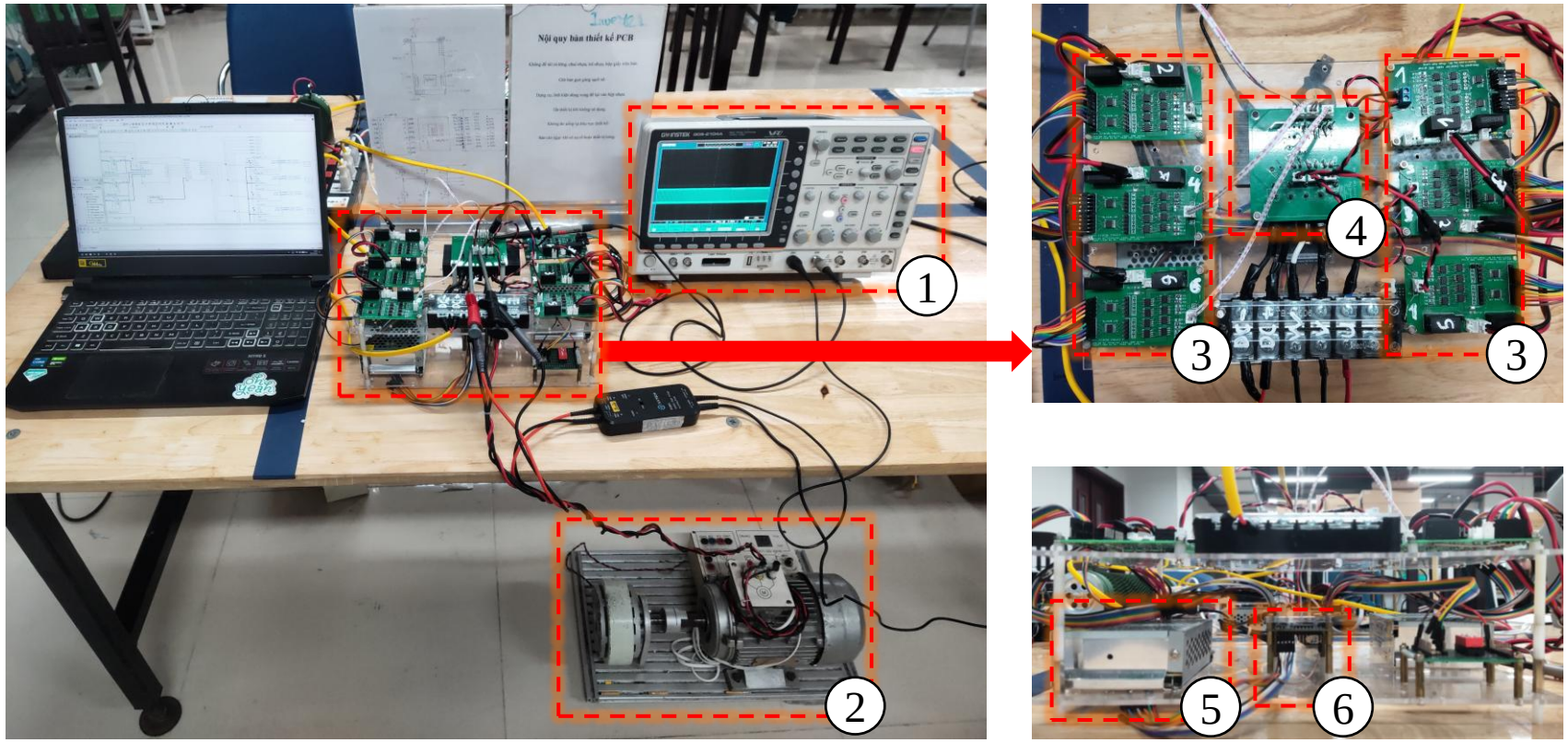

① Oscilloscope

② Induction motor

③ Active gate driver designed

④ Three phase inverter power board

⑤ Input power supply

⑥ FPGA Cyclone IV

Fig 4.3 Experimental system

4.2. Experiment results

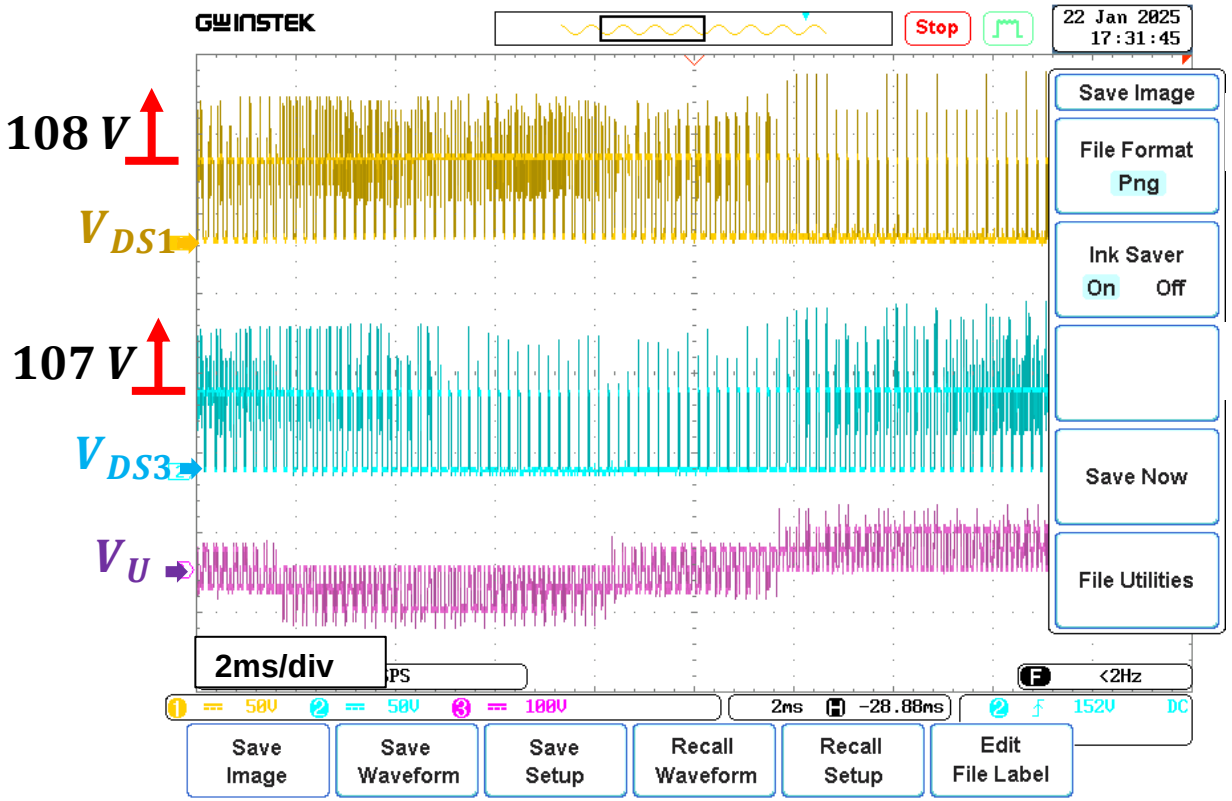

Conventional Gate 15-15-15-15-15

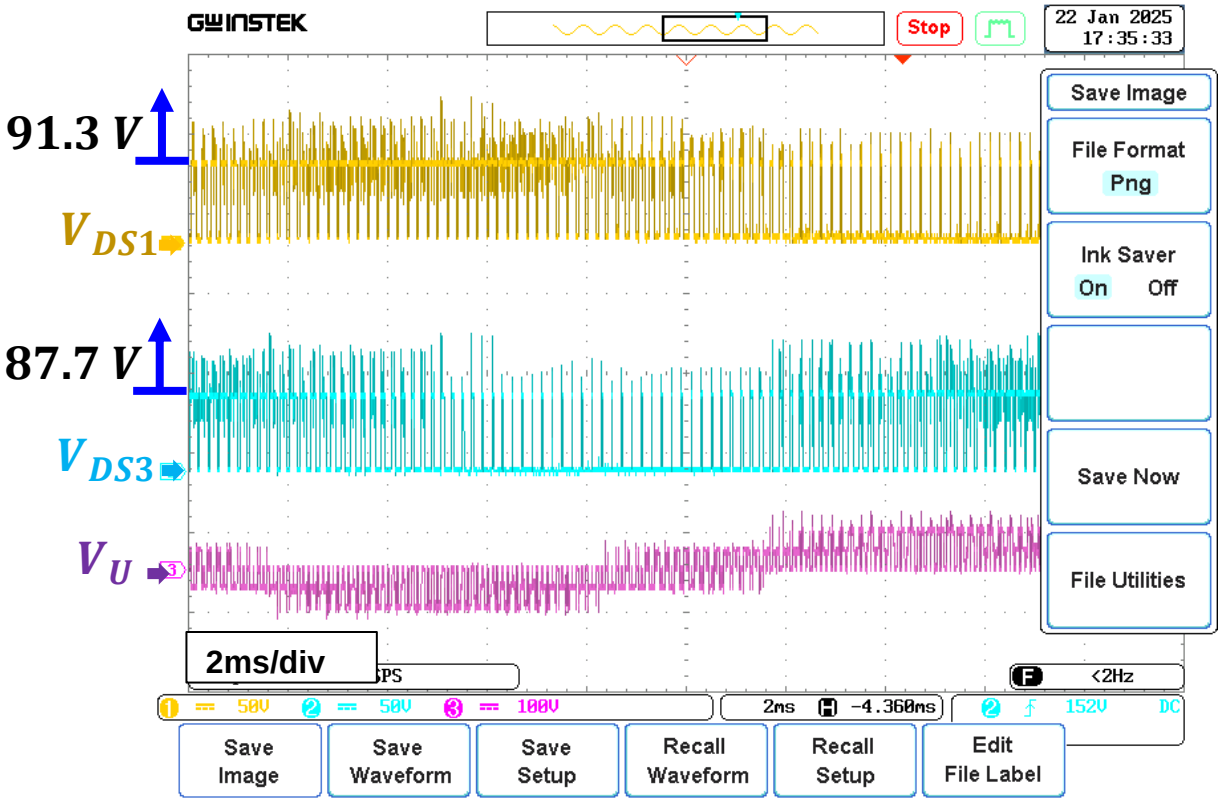

Active Gate 1-2-4-8-15

Fig 4.5. Experimental results of the active gate driver in reducing surge voltage

4.2. Experiment results

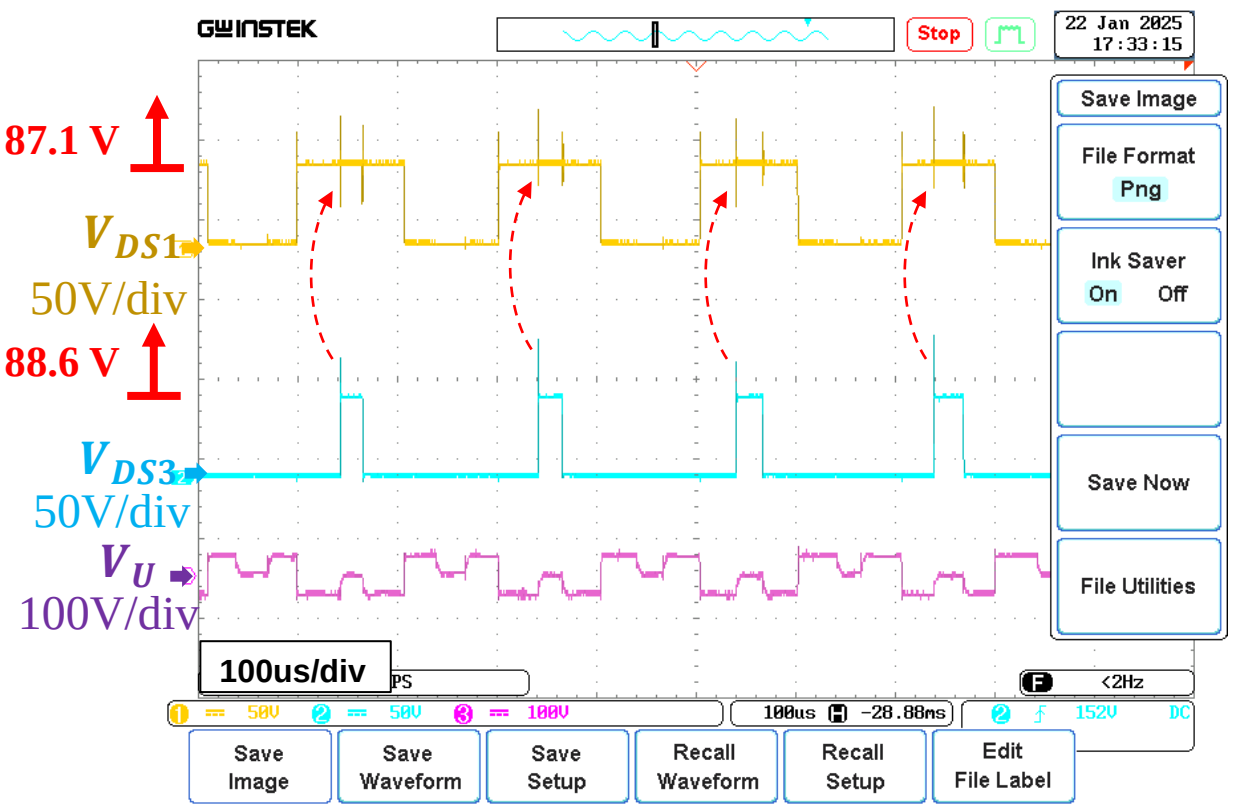

Conventional Gate 15-15-15-15-15

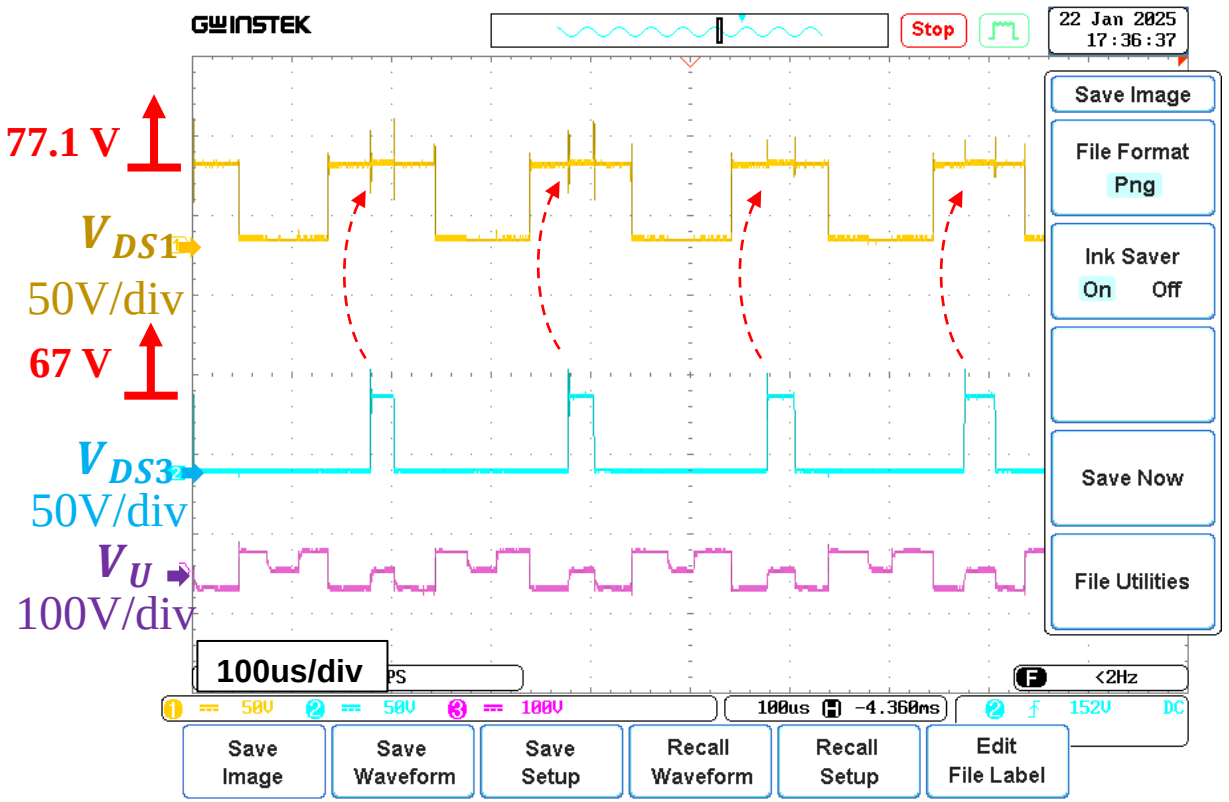

Active Gate 1-2-4-8-15

Fig 4.6 Surge voltage of Vds1 interacted by the switching operation of Q3 at the phase-V

5. Conclusion

❑ Result

- MOSFET
- Characteristics
- Gate Driver design
- LT-Spice simulation tool
- Simulation and experiment

❑ Future development

- Surge voltage detector
- Optimize Gate profile

HUST

hust.edu.vn fb.com/dhbkhn

THANK YOU !

Appendix

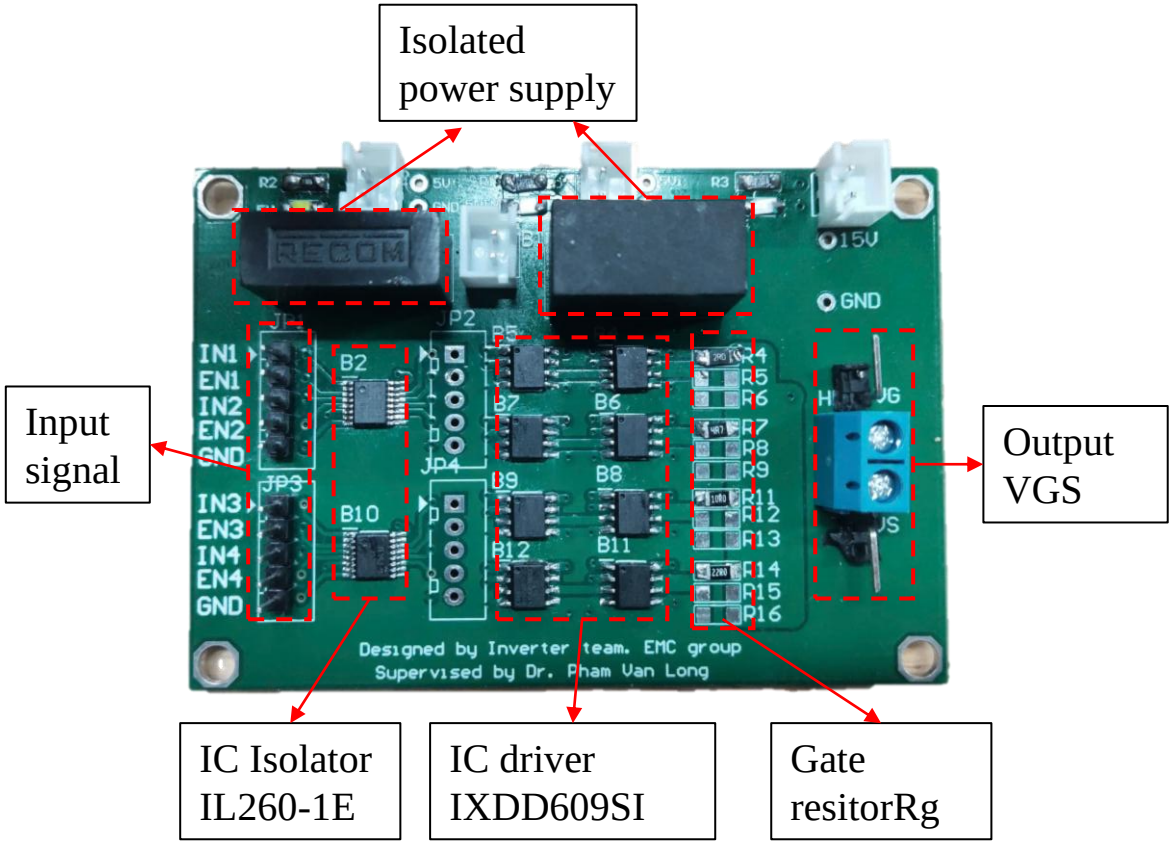

Fig. Active gate driver developed